Product card

Aluminium extension arm WR-3/2/5

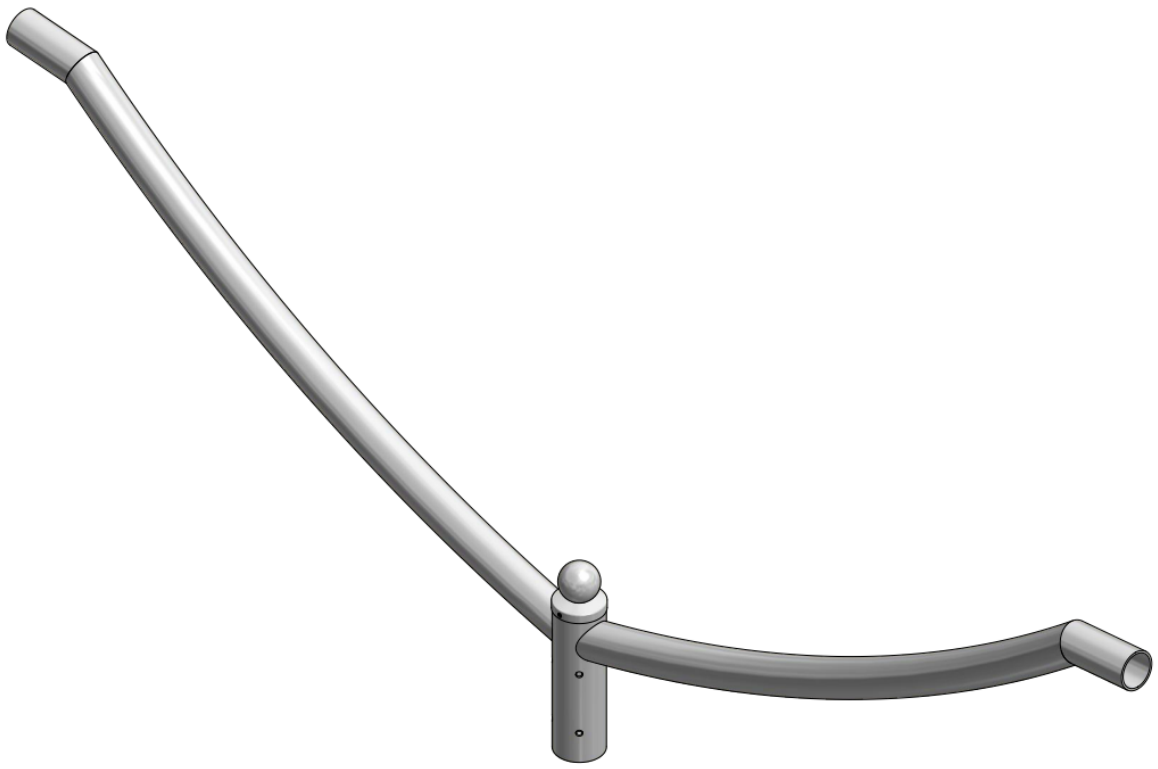

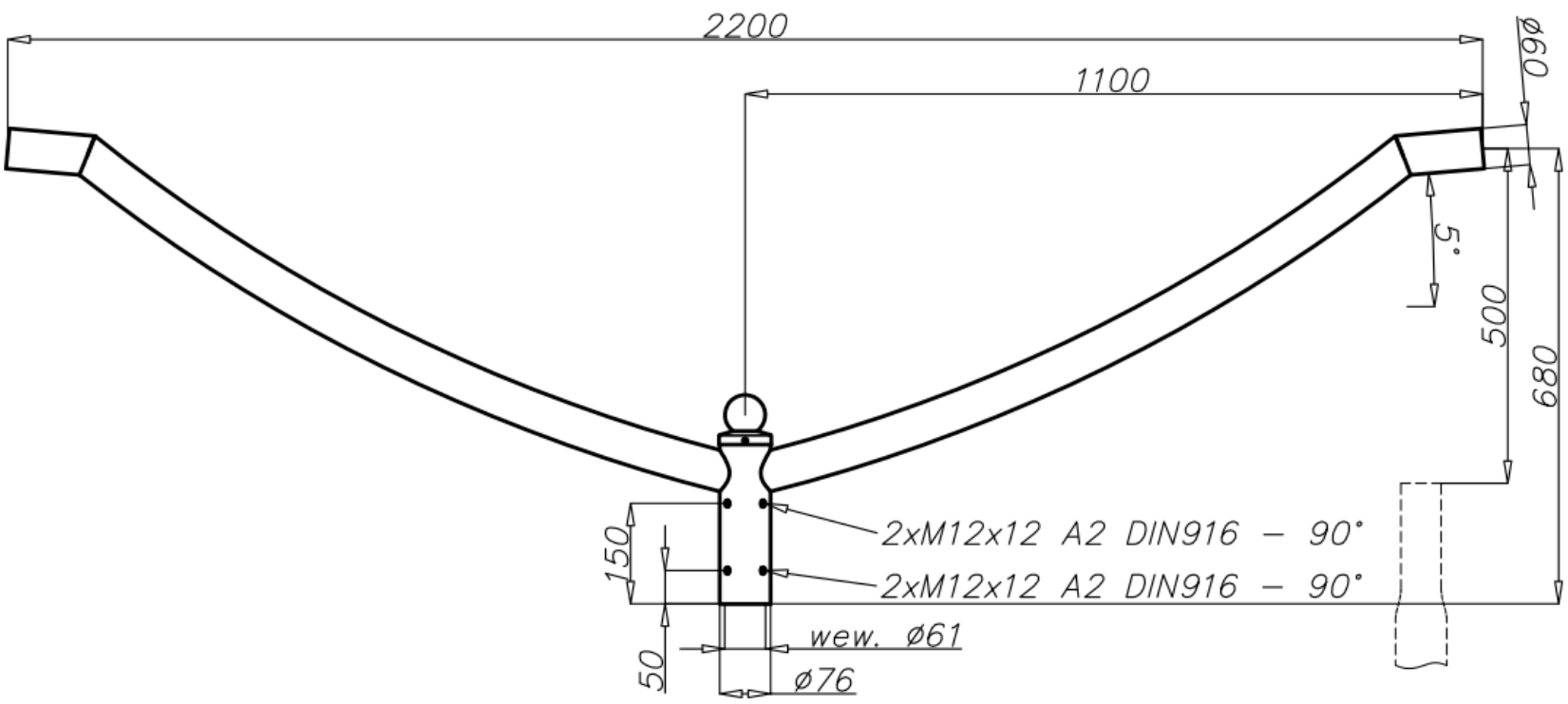

Technical data

Extension arm	WR-3/2/5
Product code	47203211
Application	aluminium columns with ending Ø60x180
Arm quantity	2
Net weight [kg]	4,9
Windage [m^2]	0,16
Volume [m^3]	0,07
Assembling diameter of luminaire [mm]	Ø 60x100
Compatible luminaires	street luminaires

- anodising in 10 colours, each with possibility of brightening
- option of powder painting in RAL colours (other colours available on request)
- packing: sleeve material
- CE certificate valid for use on poles manufactured by ROSA company